Instruction Manual

ELECTRIC LIFT TABLE

Model:EZ50A　EZ75A



Note: Owner/Operator must read and understand this instruction Manual before using the lift & tilt table.

ELECTRIC LIFT TABLE

Model **EZ50A EZ75A**

Instruction Manual

READ THIS OPERATION MANUAL COMPLETELY BEFORE USING.THOROUGHLY UNDERSTAND AND FOLLOW ALL SAFETY INSTRUCTIONS.IF THIS IS LOST, PLEASE CONTACT YOUR LOCAL SUPPLIER FOR A NEW COPY.IF THE WARNING/CAUTION DECAL ON THE UNIT IS LOST, PLEASE CONTACT YOUR LOCAL SUPPLIER FOR A NEW COPY.

Note: On this manual, WARNING means the danger, which can lead death or serious injury. CAUTION means the danger, which can lead slight injury or property damage.

1. WARNING

1. DO NOT allow another person to stand in front of or behind lifter when it starts to move.
2. ALWAYS travel with table in lowered position. Load could fall down.
3. NEVER sit, stand or ride on platform. SEVERE PERSONAL INJURY could result.
4. NEVER go under platform. SEVERE PERSONAL INJURY or DEATH could result.
5. DO NOT use in area of multilevel floor surface that could create loss control and result in SEVERE INJURY and PROPERTY DAMAGE.
6. DO NOT use lifter on slope, uneven or soft surface. Lifter may become uncontrollable. SEVERE PERSONAL INJURY and PROPERTY DAMAGE could result.
7. KEEP FEET CLEAR of rolling wheels that could result in SEVERE PERSONAL INJURY.
8. DO NOT load one fork more than the other and DO NOT load tips on table. SEVERE PERSONAL INJURY and PROPERTY DAMAGE could result.
9. DO NOT overload lifter. ALWAYS stay within designated capacity and load center rating. SEVERE PERSONAL INJURY and PROPERTY DAMAGE could result.
10. SHEARING HAZARD. NEVER place hands or feet under lowering table. SEVERE PERSONAL INJURY could result.
11. NO FIRE during charging. Read battery operation manual.
12. HIGH VOLTAGE. Disconnect battery socket before opening control panel box.

13. DO NOT remove battery terminal cover. Short-circuit or electric shock could occur.

2. CAUTION

1. Hazard or unsafe practice, which, if not avoided, may result in MINOR or MODERATE PERSONAL INJURY and PROPERTY DAMAGE.
2. READ THE OPERATION MANUAL COMPLETELY BEFORE USING AND THOROUGHLY UNDERSTAND AND FOLLOW ALL SAFETY INSTRUCTIONS.
3. This lifter is designed to use with stable uniform load on a solid lever floor. DO NOT use the lifter for any other purpose than its intended use.
4. TRAINED personnel shall operate lifter only. OPERATOR shall read “Operation Manual” completely and thoroughly understand the controls and operation of this equipment BEFORE operating the lifter.
5. ALWAYS observe lifter and ALWAYS stay at the controls while the lifter is in motion, RELEASE controls and STOP lifter immediately if load on lifter appears to become unstable. NEVER leave the loaded lifter unattended unless the table is in the fully lowered position and the lifter is locked reliably.
6. DO NOT slide the load on or off the table. The lift may move allowing the load to fall. SEVERE PERSONAL INJURY and PROPERTY DAMAGE could result.
7. DO NOT use lifter with unstable, unbalanced or loosely stacked load. Unbalanced loads may become unstable and fall. SEVERE PERSONAL INJURY and PROPERTY DAMAGE could result.
8. Qualified personnel must perform ALL lifter service only.
9. ALWAYS keep feet, hands and fingers away from casters, load wheels and all moving components. SEVERE INJURY could result.
10. ALWAYS perform maintenance and inspections with lifter unloaded.
11. Prolonged continuous working might cause damage of power pack.
12. Stop operation if temperature of hydraulic oil is too high.

The lifter is NOT waterproof and is intended to be used in a dry environment.

3. DAILY INSPECTION

Daily inspection is effective to find the malfunction or faulty on the lifter. Check the lifter on the following points before the operation.

CAUTION
DO NOT use lifter if any malfunction or faulty is found.

(1) Check scratches, bending or crack on the lifter.
(2) Check smooth movement of the wheels.
(3) Check if there is oil leakage.

(4) Check vertical creep of table.
(5) Check the function of brake.
(6) Check if all the bolts and nuts are tightened firmly.

4. OPERATING LIFT TABLE

How to use the brake.

CAUTION
Brake lift table when not moving it in order to prevent sudden movement.

The brake is equipped with the swivel caster on the right side.

(1) Brake the wheel, press the brake pedal.

(2) Releasing the brake, lift up the brake pedal.

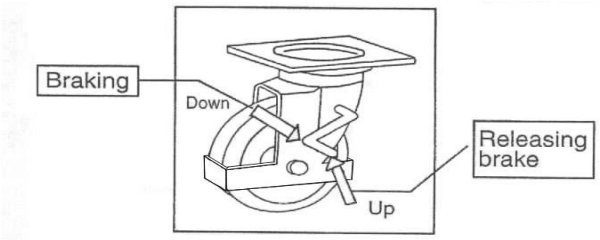

5. LIFTING UP FORKS

CAUTION
1. DO NOT overload lifter. Stay within its rated capacity.
2. Prolonged continuous working might cause damage of hydraulic power pack.
3. Step operation if temperature of hydraulic oil is too high.

Push the button “UP” and the table lifts up.

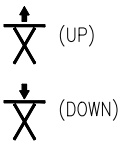

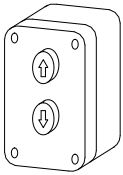

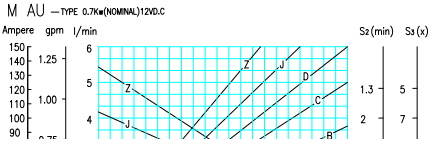

TYPE OF PUMP

A	GR.0.5 - 0.25	D	GR.0.5 - 0.75
B	GR.0.5 - 0.45	J	GR.0.5 - 0.92
C	GR.0.5 - 0.56	Z	GR.0.5 - 1.26

——Curve S2 defines the maximum running time of the D.C. Motor expressed in a minutes.

——Curve S3 expresses the on-off ratio in % which has value S3 in a total work cycle (100%).

6.LOWERING TABLE

CAUTION
DO NOT lower table with load too fast and stop suddenly. Impact load could be created and lifter could be damaged.

Push the button DOWN and the table lower.

7.MOVING THE LIFTER

WARNING
DO NOT move lifter on slope or inclined surface, otherwise lifter become uncontrollable and create danger.

(1) Make the load stable to prevent it to fall.

(2) Lower the table down.

(3) Release the brake and move the lifter.

CAUTION
KEEP watching the condition of load. Stop operating lifter if load become unstable.

8.CHARGING THE BATTERY

(1) Check the quantity of Battery fluid. If it is insufficient, add the battery solution according to battery operation manual.

(2) Disconnect the battery socket.

(3) Connect the charging port of battery socket to the battery charger.

9.REGULAR INSPECTION

Perform the regular inspection for the safety operation.

(1) Check the items expressed in daily inspection (daily).

(2) Lubricate with grease the guides where roller moves. Also, lubricate the grease nipples. (Every month)

(3) Lubricate all the pivoting points and axles. (Every 6 months)

(4) Replace the hydraulic oil for the first time: Accumulated working ten hours'

(5) Replace the hydraulic oil. (Every 12 months)

10.TROUBLE SHOOTING

TROUBLE	CAUSE	REPAIR
Platform does not rise while motor does not run.	1.Faulty wiring.	1.Check the wiring referring to the actual wiring diagram.
	2.Battery socket is disconnected	2.Connect the battery socket.

	3.Battery charge is insufficient.	3.Charge the battery.
Platform does not rise while motor runs.	1.Faulty adjustment of relief valve.	1.Adjust relief valve again.
	2.Faulty hydraulic pump.	2.Replace power pack.
	3.Shortage of hydraulic oil.	3.Add oil.
Vertical creep of table.	1.Oil leakage in power pack.	1.Replace lowering valve.
	2.Oil leakage form hydraulic circuit.	2.Check hydraulic circuit and repair.
Oil leakage from cylinder.	Faulty sealing.	Replace sealing.
Oil leakage from piping or joint.	Insufficient tightening or seal in valid.	Tighten joint again or Replace seal.
Oil leakage from air breather.	Excessive quantity of oil.	Reduce oil quantity.

11.SPECIFICATIONS

Model	EZ50A	EZ75A
Capacity (kg)	500	750
Table (mm)	915×610	915×610
Min. table height (mm)	230	230
Max. Table height (mm)	815	815
Lifting stroke (mm)	585	585
Motor (W/V)	800/12	800/12
Work cycle of hydraulic power pack	3 times of table moving up-down per 10 min.	
Approx. numbers of lifting at full charge and with full load (times)	155	150
Approx. time required lifting up table. (Sec)	15～20	15～20
Wheel (mm, diameter)	ϕ125/ϕ100	ϕ125/ϕ100
Handle height (mm)	935	935
Weight (kg)	168	168

12.HYDRAULIC CIRCUIT/WIRING DIAGRAM/ACTUAL WIRING DIAGRAM

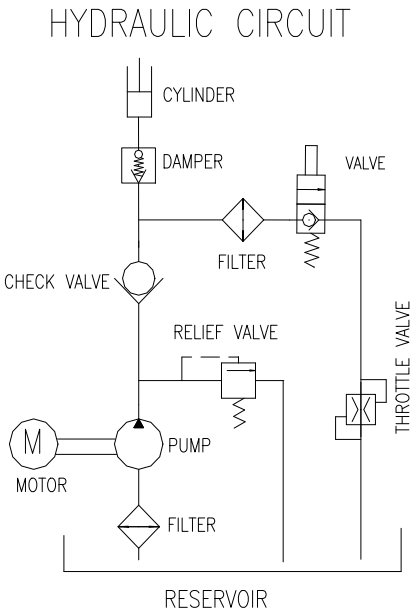

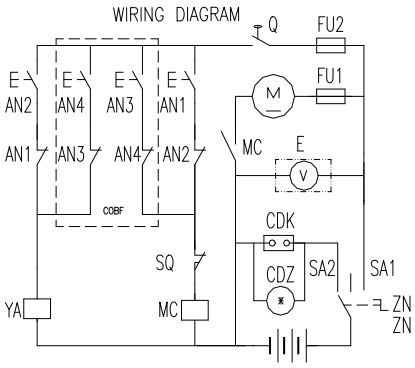

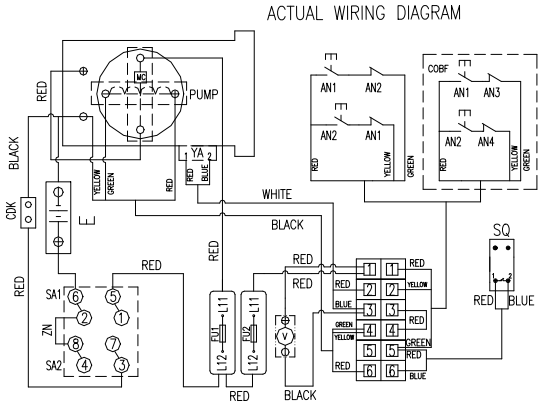

OPERATION INSTRUCTION
ENERGY SERVICE-FREE ACID-LEAD STORAGE BATTERY

1. Storage and Transportation

◇ Uncharged ENERGY storage battery needs no maintenance，Please store it in dry and frostless place.

◇ If the density of electrolyte in filled battery is less than 1.23kg/l,it shall be recharged as soon as possible，If the density of electrolyte filled in is 1.23kg/l,the storage battery shall be recharged when it is below 1.18kg/l.

◇ During transportation or storage，the filled storage battery shall be kept upright vertically to prevent acid liquid from overflowing.

◇ Cover opening、short circuit、sliding and other damage shall be avoided in the course of transportation.

2. PUT INTO USE

◇ Precharged but unfilled ENERGY storage battery can be put into use at once without charging after electrolyte is filled in it.

◇ When it is being filled，the temperature of battery and electrolyte should be 10℃ at least.

◇ Each unit of battery shall be filled with special acid whose density is 1.28kg/l.(1.23kg/l in the area of tropics),and be filled up to the line indicating the maximum level or to the height of 15mm over the top of pole plate.

◇ Keep the battery at a standstill about 15 minutes， Then sway the battery gently several times，Refill proper electrolyte if necessary.

◇ Screw or press the sealing hole tightly.

◇ Clean the acid liquid left on its surface.

◇ The storage battery can be in good condition without any service within 5 years at the temperature of 20℃.

NOTE: IF the output of the battery is not enough due to temperature or storage，Please recharge the storage battery.

3. CHARGING

◇ Before recharging，please take the battery down.

◇ The storage battery is allowed to be charged with DC power，Connect the plus pole and minus pole of storage battery correspondingly to the poles of the charger.

◇ Ensure to connect the poles rightly，switch on the charger.

◇ When the battery be charged sufficiently，cut off the charger.

◇ Recommended charging current is 1/10 of battery capacity(e.g.1/10×44=4.4A for the storage battery with capacity of 44Ah.)

◇ In the course of charging，the temperature of electrolyte is not allowed to be above55℃.

◇ If the temperature of electrolyte is above 55℃,stop charging.

◇ If the density of electrolyte and the voltage of the battery stop increasing for 2 hours， the storage battery could be thought to be charged sufficiently.

◇ When the charging is ended，please check the level of electrolyte，Add pure water to the maximum level indicating line if necessary.

4. Maintenance

To ensure the service life of storage battery，the following points must be followed.

◇ Keep battery surface clean and dry，When cleaning，only wet cloth can be used，Make sure that the liquid level is in specified position and add pure water if necessary.

◇ The so-called"battery reinforcer" must be forbidden to use Charge status can be checked by electrolyte density test.

◇ If the density of electrolyte is below 1.23kg/l(1.18kg/l in the area of tropic),the storage battery must be recharged.

◇ At such density，freezing point of electrolyte is-15℃(at the density of 1.28kg/l.freezing point is -70℃)

WARNING AND SAFETY SIGN

◇ Follow instruction described in plate of battery， operating instruction and instruction of vehicles and ships.

◇ Wear guard-glasses.

◇ Keep children from touching electrolyte and battery.

◇ Explosive Hazard Easy-explosive mixture come to escape during charge，So fire electric spark，uncovered bulb and fireworks are strictly inhibited，When connecting wire-circuit，electric spark and short-circuit must be avoided.

◇ Hazard of strong corrosion Electrolyte is strongly corrosive，So please wear protective clothes and guard glasses， Do not tilt the storage battery otherwise acid liquid will overflow.

◇ Emergency Cure when the acid liquid spatters in the eyes，wash it with a large quantity of clean water at once，then see a doctor，Acid liquid on skin and clothes shall be washed with a large quantity of clean water as well，If acid liquid is swallowed，please see a doctor at once.

◇ Warning:

- Do not put the unprotected storage battery in the sun.
- Because discharged storage battery may be frozen，please store it in frostless conditions.

◇ Handling:

- Store discarded battery in stipulated site.
- Follow rules of transportation(GGVS)during transporting.
- Do not mix discarded battery with daily rubbish.

常州市祥瑞液压设备有限公司
CHANGZHOU XIANGRUI HYDRAULIC EQUIPMENT CO.,LTD.